# pont avant, direction

Classic parts

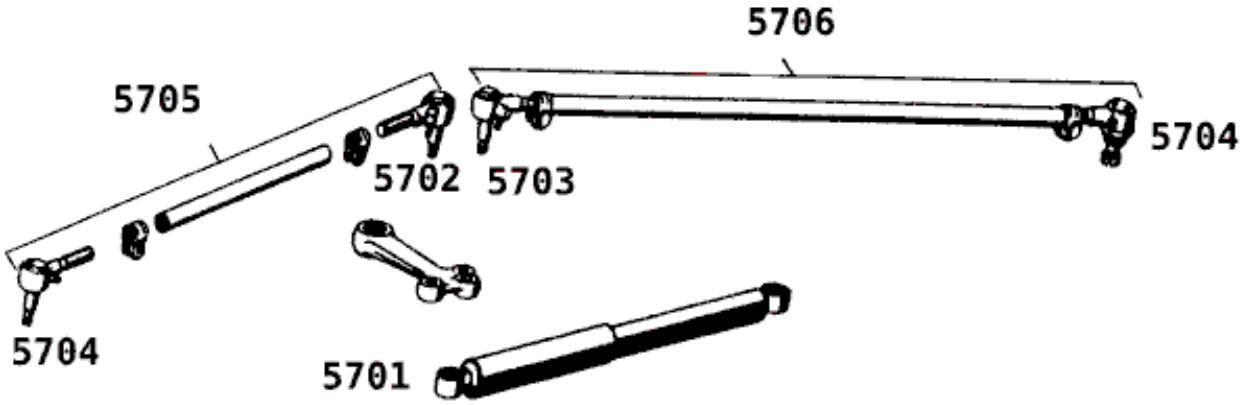

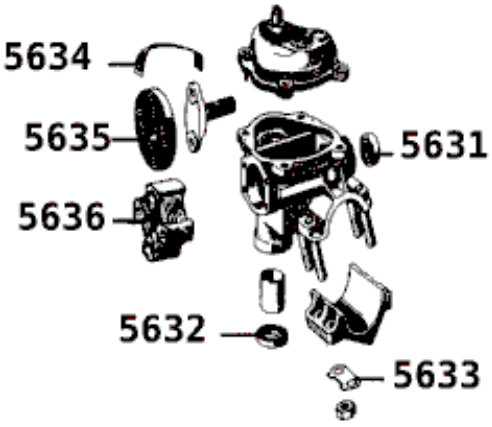

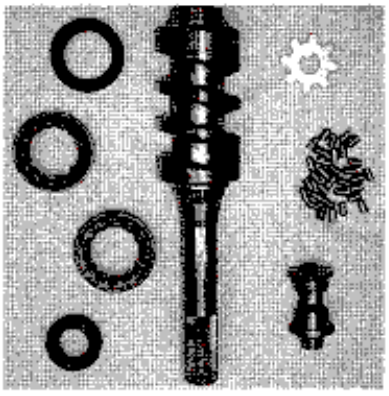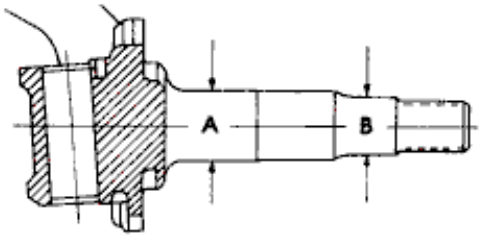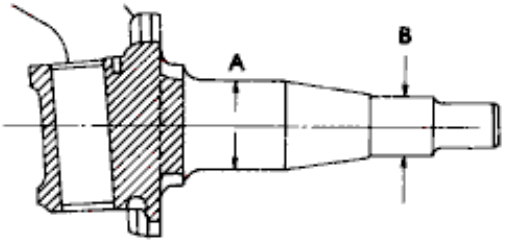
5711